Howard County
MARYLAND

DEPARTMENT OF INSPECTIONS, LICENSES & PERMITS

Robert J. Frances P.E. Director

To: *All Deck Builders*

From: *Plan Review Division*
Department of Inspection Licenses and Permits

Subject: Prescriptive Residential Wood Deck Construction Guide

Prescriptive Residential Wood Deck Construction Guide

Based on the *2009 International Residential Code*

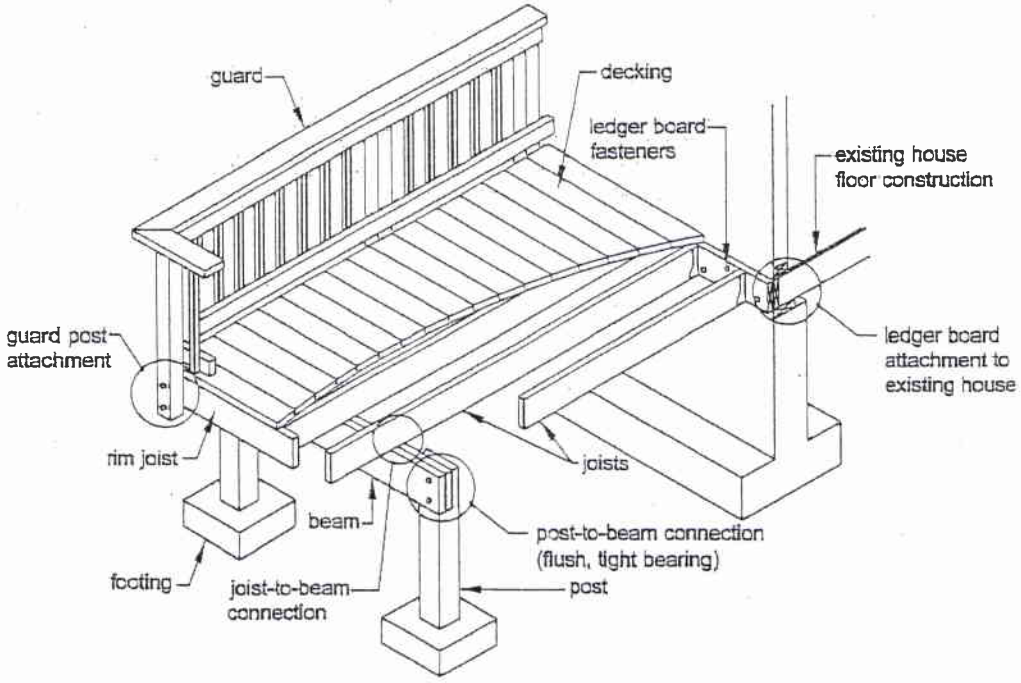

MINIMUM REQUIREMENTS:

1. This document applies to single level residential wood decks only.
2. All lumber shall be identified by the grade mark of, or certificate of inspection issued by, an approved lumber grading or inspection bureau or agency (www.alsc.org).
3. **Decks supporting large concentrated loads such as hot tubs are beyond the scope of this guide.**
4. This guide does not address wind or seismic design loads.
5. Flashing shall be corrosion-resistant metal (R703.8) of minimum nominal 0.019-inch thickness or approved non-metallic material. Siding shall be removed, and flashing placed before Ledger Board is installed. **Aluminum should not be used in direct contact with lumber treated with preservatives that contain copper such as ACQ, Copper Azole, or ACZA.**
6. Decks shall not be used or occupied until final inspection and approval is obtained.
7. This guide is not intended to preclude the use of other construction methods or materials not shown herein.

General Notes:

- **Footings** must extend **30" inches below grade,** and have a minimum footing **thickness of 8 inches.**
- Decks extending up to 14 feet from the house with 2 foot cantilever, and a maximum column spacing of 10 feet apart, shall have a **footing** size of at least **18 inches diameter** or 16"x16".
- Decks up to 16 feet from the house with 2 foot cantilever, and a maximum column spacing of 12 feet shall have a **footing** of at least **22 inches diameter** or 20"x20" inches square.
- Maximum Floor Joist Cantilever (4'feet, base on size), Maximum Beam Cantilever (2'feet).
- Handrails shall be provided on at least one side of each continuous run of treads or flight with "four" or more risers, (31" inches) vertical distance, Handrail size (Max. 3 ¼" inches cross section dimension or a Min. 1 ¼" inches). **Stair risers** are to be (Max. 7 ¾" inches) and a **tread depth** of (Min. 10" inches). Risers can be open but for not more than 4" inches.
- **Ledger Attachments:** Attachment of the ledger to the ends of pre-manufactured open web floor trusses/ joist, to brick veneer, and to house overhang/bay windows **is strictly prohibited.**
- Guardrail support posts are to be solid and mechanically bolted to deck structure, as shown in Figure 13, **no notching of support post will be allowed.** (Other methods as approved, may be used)
- Freestanding decks: Diagonal cross bracing shall be provided for all decks greater than 4' feet above grade to resist lateral loads on all vertical members (posts). Cross bracing shall be a minimum of 2"x4" inch material with a minimum of two 3/8" inch lags or two 3/8" inch thru-bolts at each end to the post.
- Post to Beam Requirements: Post to beam connection shall be made with pre-manufactured mechanical connectors. Mechanical connectors shall be galvanized with 1:85 oz/sf of zinc (G-185 coating) or shall be stainless steel. Post to beam connection may also be accomplished using a minimum 6x6 post notched for a 4x beam as shown in Figure 14. All thru-bolts shall have washers at the bolt head and nut.

WARNING : DO NOT ATTACH DECK LEDGER TO OVERHANGING FLOOR SYSTEM.

LEDGER – SEE NOTES & WARNING

USE APPROVED JOIST HANGERS

MINIMUM RAILING HEIGHT = 36" ABOVE DECKING WHEN MORE THAN 30" ABOVE GRADE. ATTACH RAILING POST TO DECK WITH 3/8" LAG OR CARRIAGE BOLTS WITH WASHERS.

FLOOR JOISTS SPACING (SEE SPAN TABLE)

SEE SPAN TABLE SEE REVERSE SIDE

APPROVED DECKING

NAIL BEAMS TOGETHER WITH 3 ROWS NAIL 12" O/C THRU ALL PLY.

12"

POST

INTERMEDIATE RAILS 4" MAX. CLEAR OPENING.

DECK SUPPORT BEAMS (See Reverse Side)

MAXIMUM UNSUPPORTED POST HEIGHT:

4"x4"	8'–6"
6"x6"	12'–6"
8"x8"	15'–0"

POST

POST

GRADE LINE

CARRIAGE BOLT SUPPORT BEAMS TO POST WITH 1/2" SIZE BOLTS & WASHERS.

USE APPROVED ANCHORING SYSTEM ATTACH TO TOP OF CONCRETE FOOTING.

MINIMUM 30" BELOW GRADE.

SEE FOOTING SIZE

MINIMUM 8" THICK CONCRETE

LAG BOLT

CARRIAGE BOLT

DECK FLASHING DETAIL

Remove Siding at Ledger Area

Flash behind Siding and over Ledger or

Behind Siding and behind Ledger

(Flashing behind ledger requires to be exposed/visable)

Alternate Methods for Deck Attachment

With Engineered Lumber

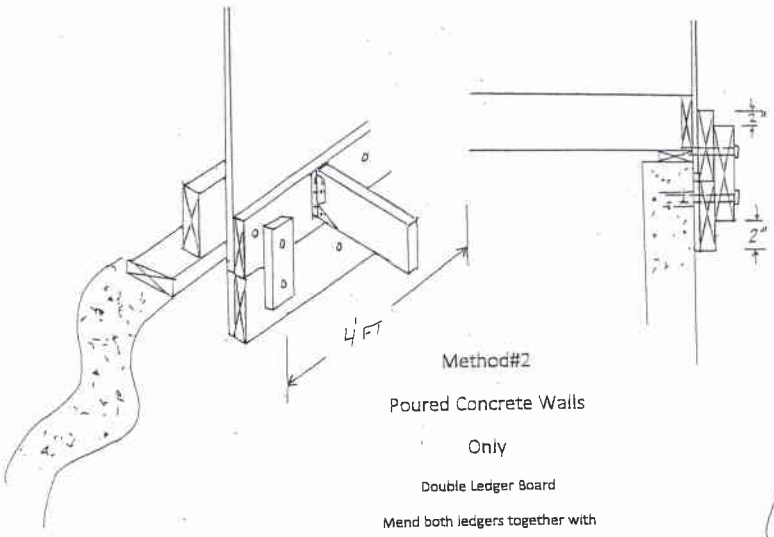

Method#2

Poured Concrete Walls

Only

Double Ledger Board

Mend both ledgers together with

2 X stock and fastened with ½" lags

Every 4ft. o.c. & 2" inches from top and bottom

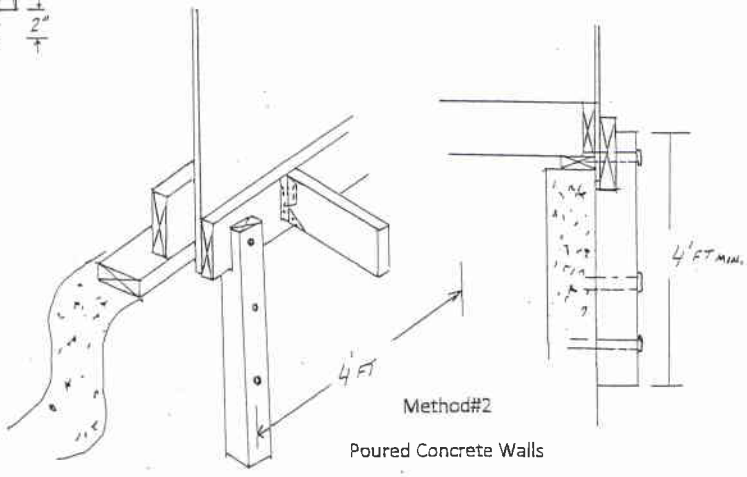

Method#2

Poured Concrete Walls

Only

Single Ledger Board

Notch 4 x 4's and fasten with ½" lags

Min. size 4ft. long (3 lags min.) and spaced every 4ft. o.c.

FLASHING TO GO BEHIND SIDING

(Flashing to go over Ledger and behind Ledger)

CRUSHING OF SIDING NOT PERMITTED

Table 1. Common preservative treatments and retention levels (pcf) for sawn lumber in ground contact.[a]

Species	ACQ-B	ACQ-C	ACQ-D	CA-B	CuN-W
Southern Pine	0.40	0.40	0.40	0.21	0.11
Douglas Fir-Larch	0.40	0.40	NR	0.21	0.11
Hem-Fir	0.40	0.40	0.40	0.21	0.11
Ponderosa Pine	0.40	0.40	0.40	0.21	0.11
Red Pine	0.40	0.40	0.40	0.21	0.11
Spruce-Pine-Fir	NR	0.40	NR	NR	NR
Redwood	NR	NR	NR	NR	NR

[a] Preservatives and retentions listed in Table 1 are based on the American Wood Protection Association (AWPA) *Book of Standards*. NR = Treatments Not Recommended.

Table 2. Maximum Joist Spans (L_J)

		Joist Spacing (o.c.)					
		Without Overhangs[1]			With Overhangs up to $L_J/4$[2]		
Species	Size	12"	16"	24"	12"	16"	24"
Southern Pine	2x8	13' - 8"	12' - 5"	10' - 2"	10' - 9"	10' - 9"	10' - 2"
	2x10	17' - 5"	15' - 10"	13' - 1"	15' - 6"	15' - 6"	13' - 1"
	2x12	18' - 0"	18' - 0"	15' - 5"	18' - 0"	18' - 0"	15' - 5"
Douglas Fir-Larch, Hem-Fir, SPF[3]	2x8	12' - 6"	11' - 1"	9' - 1"	9' - 5"	9' - 5"	9' - 1"
	2x10	15' - 8"	13' - 7"	11' - 1"	13' - 7"	13' - 7"	11' - 1"
	2x12	18' - 0"	15' - 9"	12' - 10"	18' - 0"	15' - 9"	12' -10"
Redwood, Western Cedars, Ponderosa Pine[4], Red Pine[4]	2x8	11' - 8"	10' - 7"	8' - 8"	8' - 6"	8' - 6"	8' - 6"
	2x10	14' - 11"	13' - 0"	10' - 7"	12' - 3"	12' - 3"	10' - 7"
	2x12	17' - 5"	15' - 1"	12' - 4"	16' - 5"	15' - 1"	12' - 4"

1. Assumes 40 psf live load, 10 psf dead load, L/360 deflection, No. 2 grade, and wet service conditions. See Figure 1B.
2. Assumes 40 psf live load, 10 psf dead load, L/180 cantilever deflection with 220 lb point load, No. 2 grade, and wet service conditions. See Figure 1A and Figure 2.
3. Incising assumed for refractory species including Douglas fir-larch, hem-fir, and spruce-pine-fir.
4. Design values based on northern species with no incising assumed.

Table: 3

TABLE R502.2.2.1
FASTENER SPACING FOR A SOUTHERN PINE OR HEM-FIR DECK LEDGER AND A 2-INCH NOMINAL SOLID-SAWN SPRUCE-PINE-FIR BAND JOIST[c, f, g]
(Deck live load = 40 psf, deck dead load = 10 psf)

JOIST SPAN	6′ and less	6′1″ to 8′	8′1″ to 10′	10′1″ to 12′	12′1″ to 14′	14′1″ to 16′	16′1″ to 18′
Connection details	On-center spacing of fasteners[d, e]						
$^1/_2$ inch diameter lag screw with $^{15}/_{32}$ inch maximum sheathing[a]	30	23	18	15	13	11	10
$^1/_2$ inch diameter bolt with $^{15}/_{32}$ inch maximum sheathing	36	36	34	29	24	21	19
$^1/_2$ inch diameter bolt with $^{15}/_{32}$ inch maximum sheathing and $^1/_2$ inch stacked washers[b, h]	36	36	29	24	21	18	16

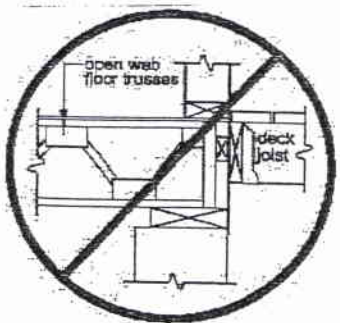

NO ATTACHMENT TO OPEN WEB TRUSSES

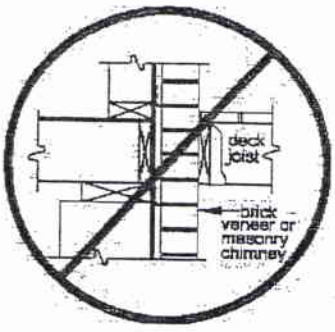

NO ATTACHMENT TO BRICK VENEER

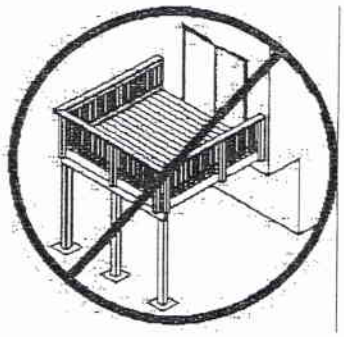

NO ATTACHMENT TO HOUSE OVERHANG

Figure: 1

Table: 4 SDS Screw Spacing for a Sawn Lumber Deck Ledger to Band Joist

Loading Condition	Ledger Nominal Size (in.)	SDS Screw Length (in.)	Band Joist Material and Size	Maximum Deck Joist Span						
				Up to 6 ft.	Up to 8 ft.	Up to 10 ft.	Up to 12 ft.	Up to 14 ft.	Up to 16 ft.	Up to 18 ft.
				Maximum On-Center Spacing of Fasteners (in.)						
40 psf Live 10 psf Dead	2x	3½	2" Nominal Sawn Lumber	13"	10"	8"	6"	5"	5"	4"
	2-2x[3]	5								
	2x	3½	1" Min. Oriented Strand Board (OSB) Rim Board	12"	9"	7"	6"	5"	4"	4"
	2x	3½	1⅛" Min. Oriented Strand Board (OSB) Rim Board or 1¼" Min. Structural Composite Lumber	15"	11"	9"	7"	6"	5"	5"

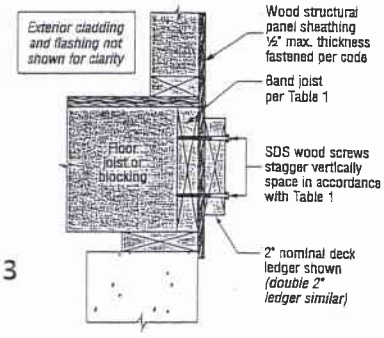

Figure: 3

Ledger-to-Band Joist Assembly
(Wood-framed lower floor acceptable, concrete wall shown for illustration purposes)

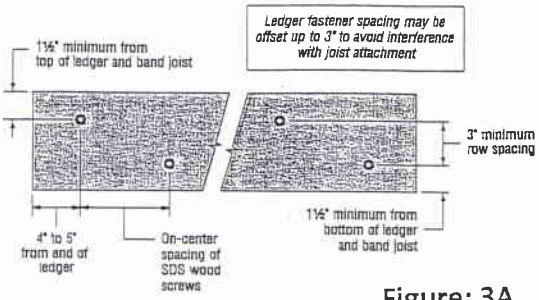

SDS Screw Spacing Detail

Figure: 3A

Figure: 4

General Attachment of Ledger Board to Band Joist or Rim Board

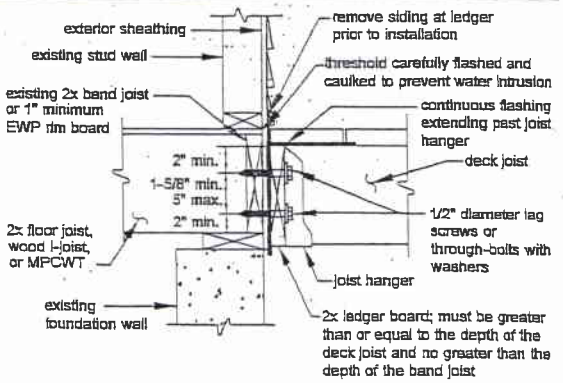

Figure: 5

Attachment of Ledger Board to Foundation Wall (Concrete or Solid Masonry)

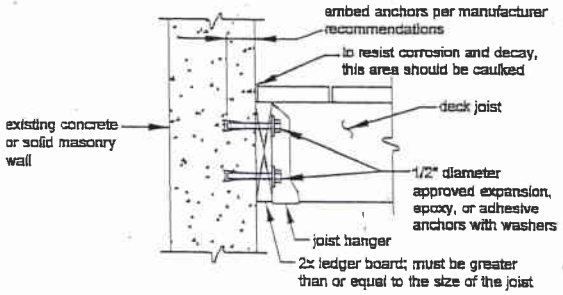

Figure: 6

Beam Assembly Details

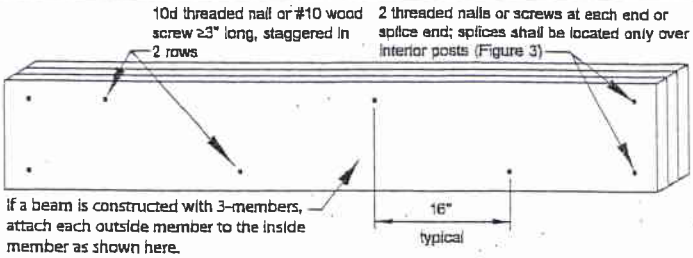

Figure:6A Post-to-Beam Attachment Requirements

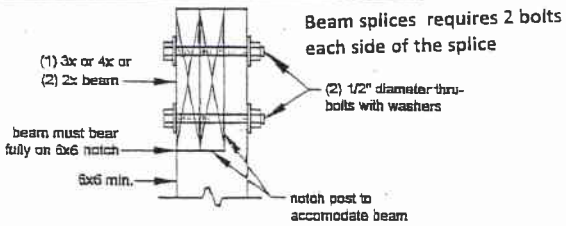

Figure: 7 Alternate Approved Post-to-Beam Post Cap Attachment

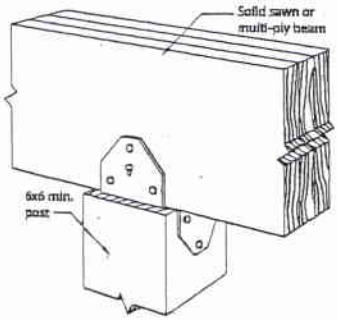

Figure: 7A Prohibited Post-to-Beam Attachment

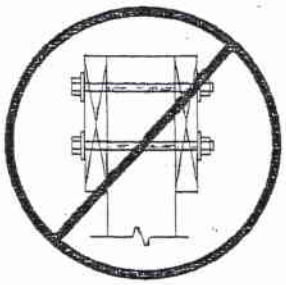

Table: 5 Deck Beam Spans (L_B)[1] for Joists Framing from One Side Only

Species	Size[4]	Joist Spans (L_J) Less Than or Equal to: 6'	8'	10'	12'	14'	16'	18'
Southern Pine	2-2x6	7' - 1"	6' - 2"	5' - 6"	5' - 0"	4' - 8"	4' - 4"	4' - 1"
	2-2x8	9' - 2"	7' - 11"	7' - 1"	6' - 6"	6' - 0"	5' - 7"	5' - 3"
	2-2x10	11' - 10"	10' - 3"	9' - 2"	8' - 5"	7' - 9"	7' - 3"	6' - 10"
	2-2x12	13' - 11"	12' - 0"	10' - 9"	9' - 10"	9' - 1"	8' - 6"	8' - 0"
	3-2x6	8' - 7"	7' - 8"	6' - 11"	6' - 3"	5' - 10"	5' - 5"	5' - 2"
	3-2x8	11' - 4"	9' - 11"	8' - 11"	8' - 1"	7' - 6"	7' - 0"	6' - 7"
	3-2x10	14' - 5"	12' - 10"	11' - 6"	10' - 6"	9' - 9"	9' - 1"	8' - 7"
	3-2x12	17' - 5"	15' - 1"	13' - 6"	12' - 4"	11' - 5"	10' - 8"	10' - 1"

Figure: 8

Beam Span Types

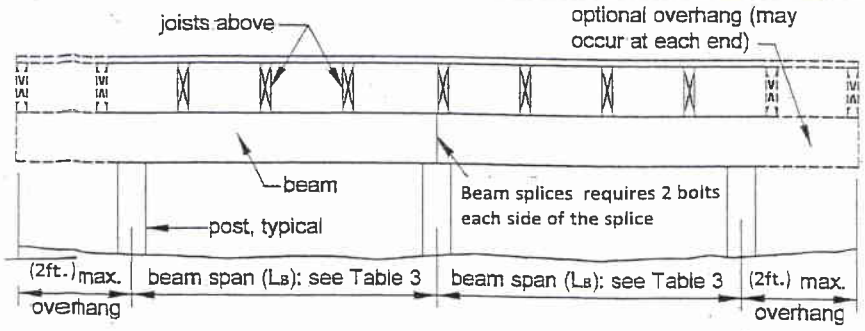

Figure: 8A

Joist-to-Beam Detail

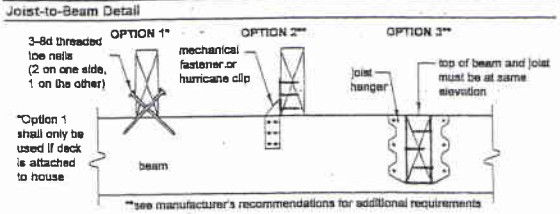

Figure: 9

Joist Span – Deck Attached at House and Bearing Over Beam

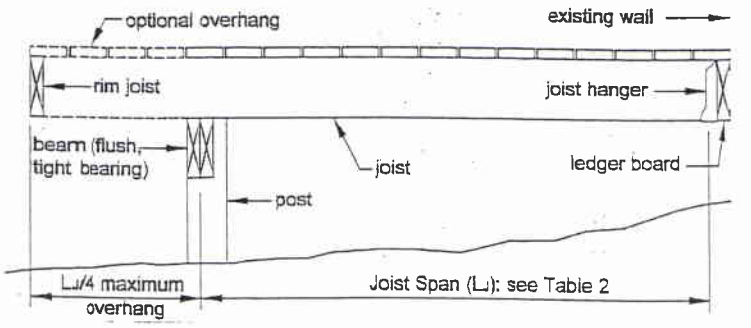

Figure: 10

Joist Span – Joists Attached at House and to Side of Beam

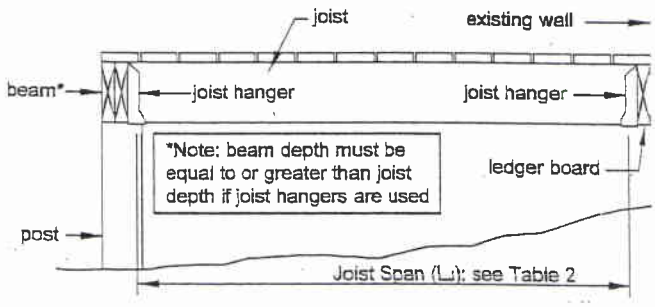

Figure: 11

Joist Span – Free Standing Deck

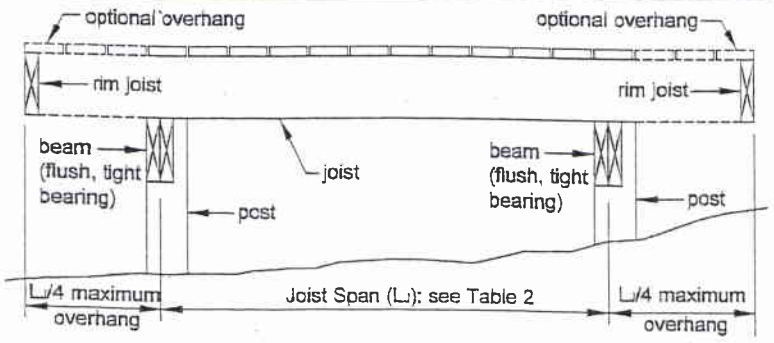

Figure: 12

Diagonal Bracing Requirements

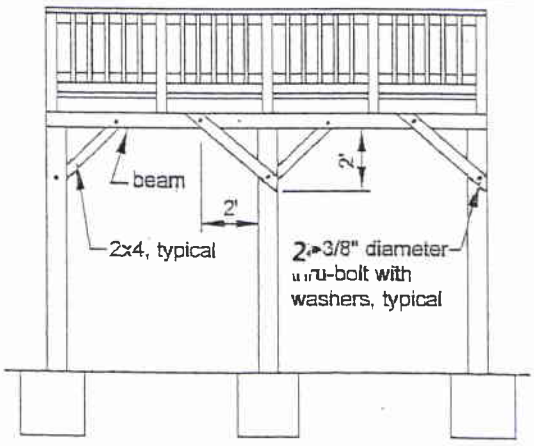

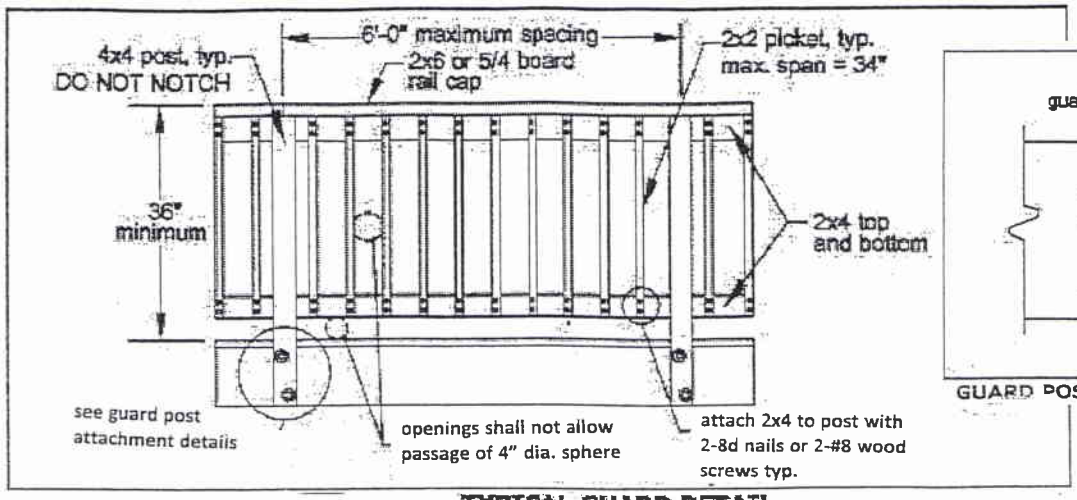

Figure: 13 **TYPICAL GUARD DETAIL**

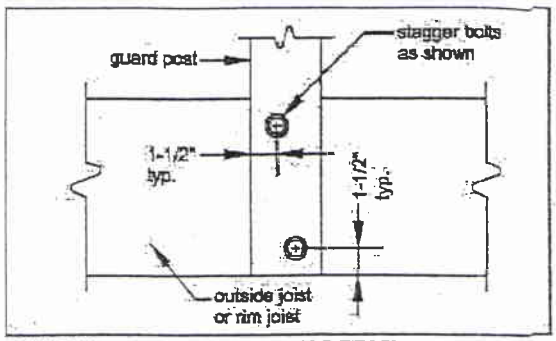

GUARD POST ATTACHMENT DETAIL

Figure: 13A

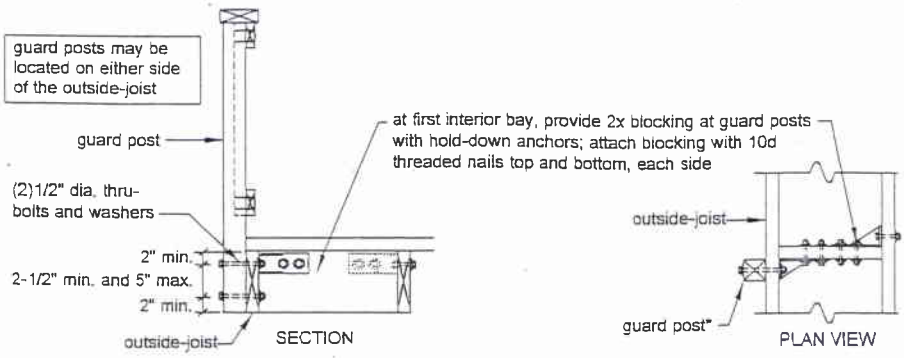

Figure:14

Mechanical Connected Post to Deck Structure

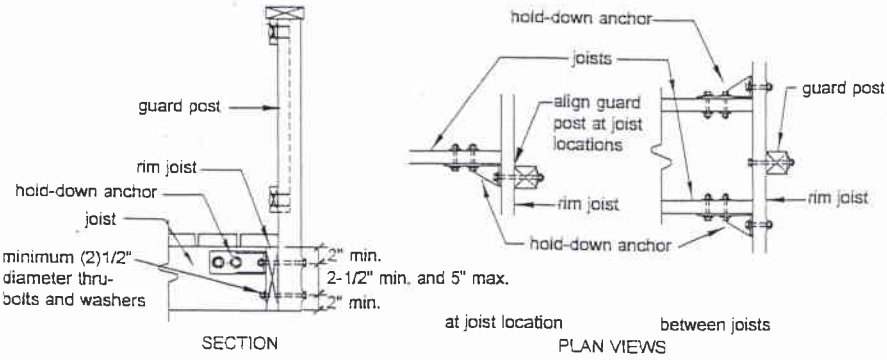

Figure:15 Guard Post to Outside Rim Joist

Figure: 16

Stair Stringer Attachment Detail

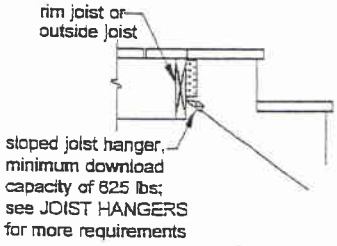

ATTACHMENT WITH HANGERS

Figure: 17 Stair Guard Requirements

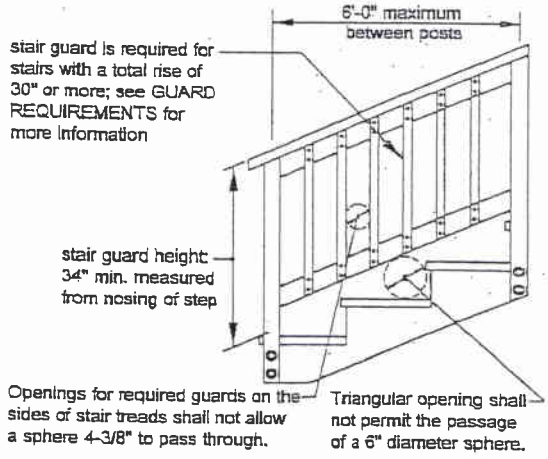

Figure: 18 Tread and Riser Detail

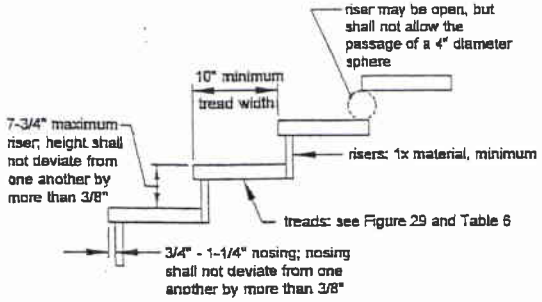

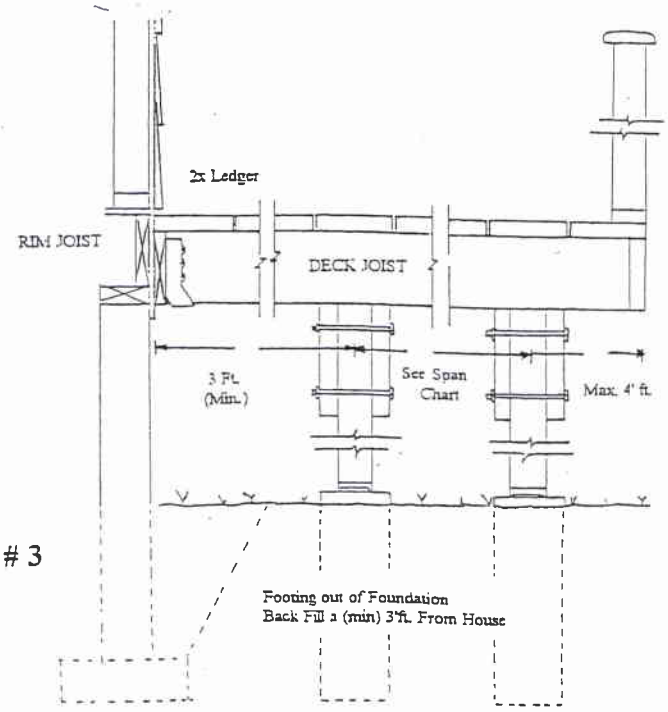

Method # 3

Figure: 19 Stair Stringer Requirements

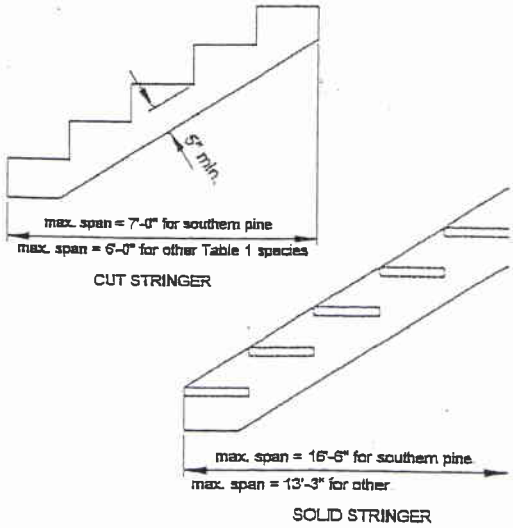

Sample Plot Plan

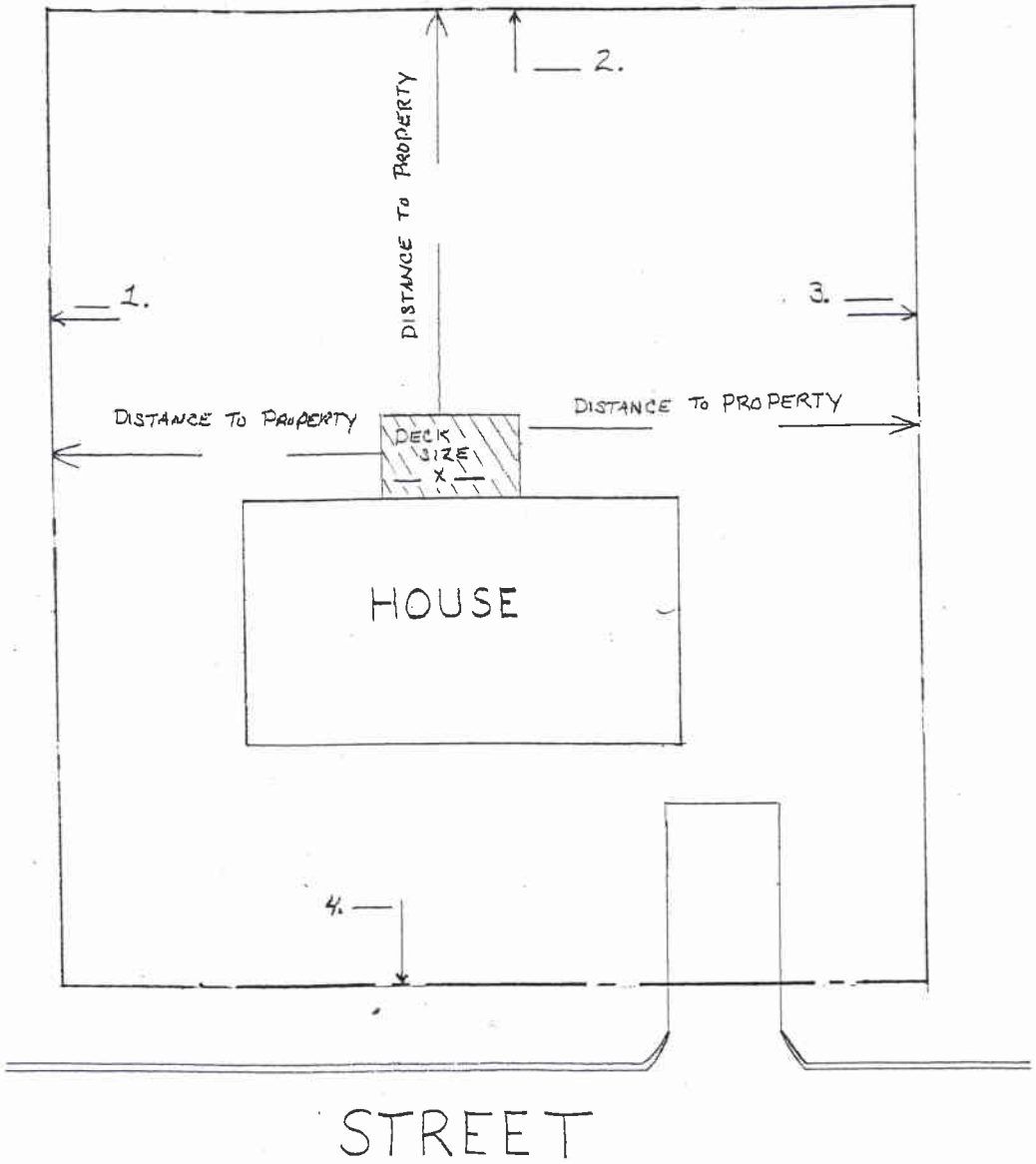

NAME: _____ ADDRESS: _____